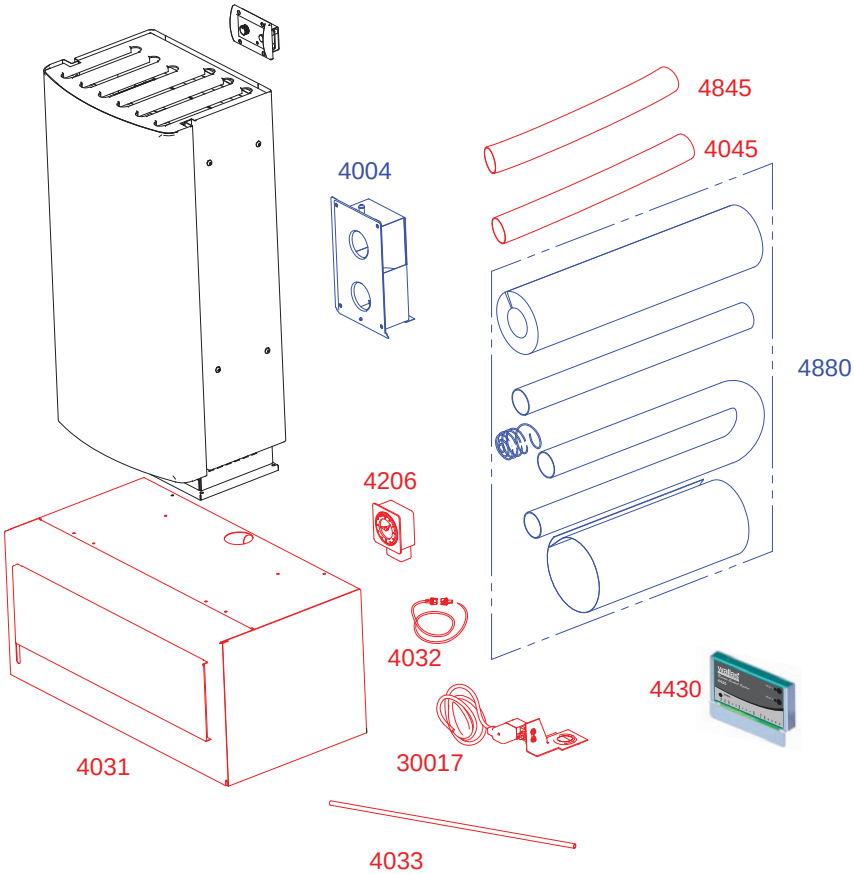

Standard delivery	Installation accessory	Special installation	Accessory
■	●	○	✳

Supplies and accessories

		26CC / 40 CC
4031	Fuel tank socket case	○
4206	Timer/week program, mechanical	○
363055	Timer cable	○
4430	Remote control system	✳
4004	Exhaust head	●
4880	Mounting kit	●
30017	Solenoid valve	○
4130	Fuel tank, 130 l	○
4030	Fuel tank, 30 l	●
2027	Fuel tank, 10 l	●
4045	Combustion air pipe Ø 45 mm, Al	●
4845	Exhaust pipe Ø 50/45 mm, stainless	○
4033	Protection tube 0,5 m, fuel hose	○
363054	Control panel cable, 6 m	○
4032	Extension line, 2 m	○
4012	Insulating channel	○
4015	Insulation mantel plate Ø 115 mm / 0,3 m	○

Alternative front panels and their content

26GF	
1 pcs	Front panel, grey **26CC**
4 pcs	Fastening screw M4x16
26PF	
1 pcs	Front panel, pine pattern **26CC**
4 pcs	Fastening screw M4x16
40GF	
1 pcs	Front panel, grey **40CC**
4 pcs	Fastening screw M4x16
40PF	
1 pcs	Front panel, pine pattern **40CC**
4 pcs	Fastening screw M4x16

Front panel, grey

Installation:
See page 55.

Front panel, pine pattern

Device package contents

26CC / 40CC			
1 pcs	Heater without front panel		
1 pcs	Control panel package **361061A**		
	1 pcs		Control panel
	1 pcs		Control panel rim for surface mounting
	1 pcs		Control panel cable, 3 m
	4 pcs		Control panel fastening screws 3,5x40
1 pcs	Power cable with connector and integrated fuse 15 A (4m)		
1 pcs	Fuel hose, 4 m		
1 pcs	Fuel tank connection		
1 pcs	Short circuit connector for mountain switch		
1 pcs	Accessory bag **260941A**		
	1 pcs	10	Hose binder 32-50 mm
	1 pcs	11	Pipe clamp 48 mm
	4 pcs	12	Fastening screws 5x30 (black)
1 pcs	Installation, operation and maintenance instructions		

Heater operation

Wallas heaters **26CC** and **40CC** have been designed especially for use in holiday cottages.
Light furnace oil, diesel oil or paraffin can be used to fuel the device. The heater is fed with fuel from a separate tank, which is positioned below the heater. The heater is powered by a 12-volt battery, which can be recharged, for example, by a solar cell, wind generator or a mains power adapter.
The combustion air is fed in from outside the device and its circulation is completely enclosed, and balanced with the flue-gas exhaust head, which eliminates the effect of wind pressure on the combustion.
The heater's evaporation burner is activated automatically when the device is started. The glow plug in the burner ignites the fuel that has been pumped into the burner. The glow time is fixed: it starts and ends automatically.
The heat sensor, in the heater, detects the flame's heat and lights the red LED to signal that the device has started.
All functions are controlled electronically. The fuel pump and combustion air blower are fully stabilised against voltage fluctuations, which ensures clean combustion, regardless of changes in the battery voltage.
The heater is equipped with built-in overheat protection, which cuts the fuel feed if the device overheats.
When the heater is switched off, it cools down automatically. The cooling function ventilates the burner, and discharges the flue-gases generated during the switch-off, to the outside of the cottage.

Technical information

	26CC	40CC
Fuel	Light furnace oil / diesel oil (cold resistance grade according to conditions of use) or paraffin	
Operating voltage	12 V DC	
Consumption	0,09...0,26 l/h	0,16...0,4 l/h
Heating power	900...2600 W	1600...4000 W
Power adjustment	Room thermostat or manual power control	
Start-up	Manually with a switch or with the automatic weekly timer (accessory) or remote controller (accessory)	
Power consumption	0,2...0,4 A (when ignited ca. 4,5 min. 8 A)	
Measurements	730x340x200 mm	730x440x240 mm
Weight	ca. 18,5 kg	ca. 25,0 kg
Max. permissible length of the flue gas pipe	3 m, (6 m insulated)	
Max. permissible length of the fuel hose	6 m	
Heating area	ca. 40...60 m^2	ca. 60...90 m^2
Suitable flue gas lead-throughs	**4004**	
Accessories	**4031** Base housing **4206** Weekly timer **4430** Remote controller	
Connections	Remote controller	

Operating principles

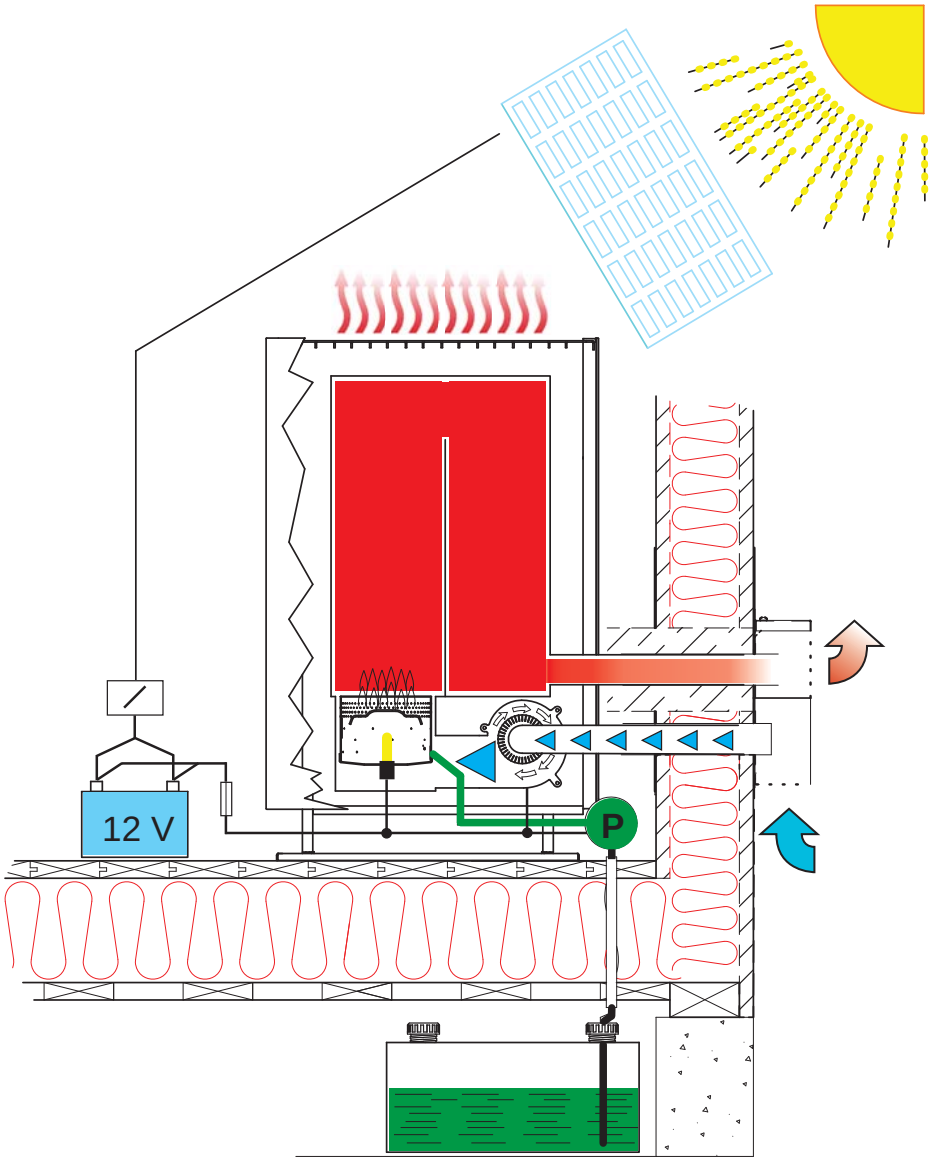

Things to note during installation

Basic installation methods

The most common installation method is a wall lead-through. Installation kit **4880** and a flue-gas exhaust head **4004** have been used in the installation. In addition, the fuel tank **4030** (30 l) has been installed in the base housing **4031**.
Flue installation. This installation method requires the building's chimney to have one flue available. The flue must not be connected to other fireplaces or equipment. Installation kit **4880** is required for the installation. In the example in the picture, the fuel is fed from the fuel tank **4130** (130 l) under the floor.

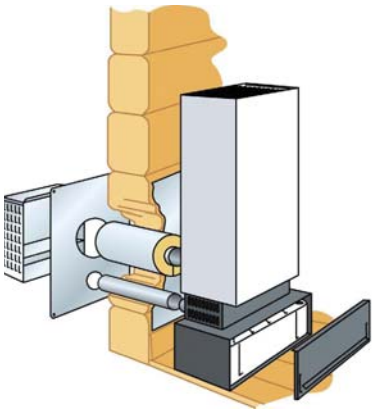

Wall lead-through

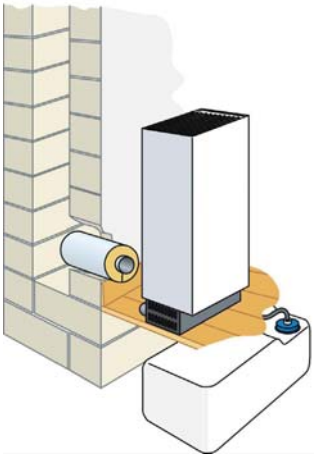

Flue installation

Things to note when selecting the installation location

When selecting the installation location and method, note the following:

- If you choose the wall lead-though method, install the device on a wall where the wind pressure does not directly impinge the flue-gas exhaust head. When the device is running on low power, wind pressure can snuff out the burner flame. The burner will also generate more scale due to changes in wind pressure.
- The length of the control panel wire is 3 m. Do not install the device near to an external door or a window, because the temperature changes in these locations are too great. The control panel contains a thermostat sensor.
- Flue installation will slightly increase the generation of burner scale.
- Avoid making the fuel and electrical lines that lead to the device excessively long.
- The device must be positioned so that it is protected from water drips, spills or splashes.

When installing the device, bear in mind that may be necessary to detach the device for maintenance. Therefore, it is advisable to make the connections easy to open and disconnect. The device does not need to be detached to clean the burner.
The heater should be installed on the level. The inclination must not exceed 5°. While the device should not breakdown, if it is temporarily tilted at a steep angle (even for some hours), the burner will not yield the optimal performance, if it is continuously inclined.
Also, consider where you place the control panel, as the length of the control panel's cable may pose some limitations.
Avoid installing the control panel in the immediate vicinity of a water outlet.
If possible, install the control panel on a vertical surface.

We recommend that the device be installed by an authorised Wallas service shop.

Protection of pipes, hoses and cables

Power cables and fuel hoses must be protected in locations where they are susceptible to mechanical damage due to sharp edges or heat.

Safety distances

Distance from surrounding walls. Observe country-specific requirements.

There must be enough clearance between the wall and the device so that the space can be kept clean and free of dust, litter and other unwanted objects. The openings for the air intake, in the lower section of the device's casing, must be unobstructed.
There must be no surfaces, structures or objects that are flammable or can obstruct the heat, within 1 m above the device's upper surface.

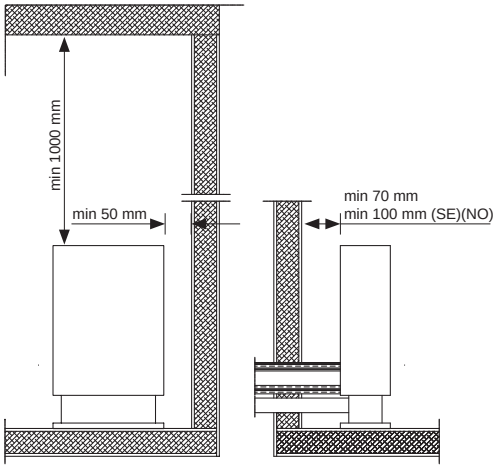

Safety distances

Device over 1300 m above sea level

If the device is installed over 1300 m above sea level, a short circuit connector to activate the mountain switch has to be added into a connector J14 of the device's circuit board. The connector is in the accessory bag.
Do not remove the jumper (or change its location) from the device's circuit board.

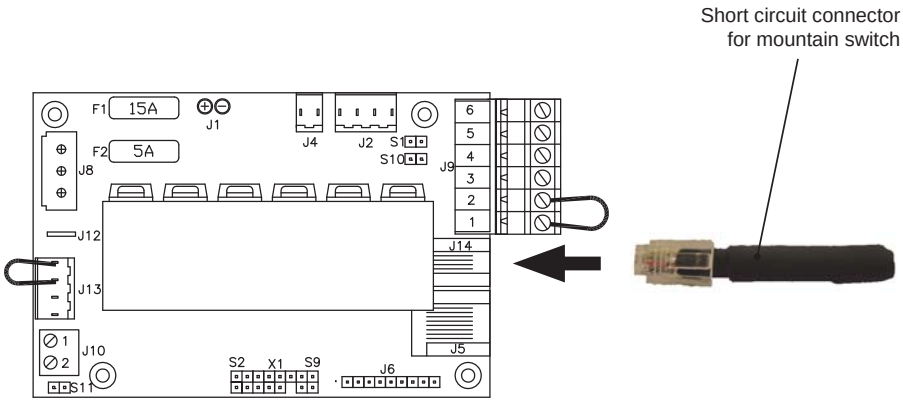

Always use original Wallas accessories and parts with Wallas equipment.

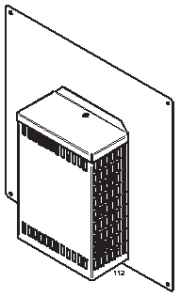

Flue gas connections

Accessory package contents

Exhaust head 4004		
1 pcs	15	Exhaust head **4004**
2 pcs	16 17	Covering plate 360x360
8 pcs	34	Fastening screw 4,5x15
4 pcs	30	Fastening screw 4,5x25

Mounting kit 4880		
0,5 m	18	Exhaust pipe **4845**
0,5 m	19	Insulating channel **4012**
2 pcs	20	Insulation mantel plate, 0,3 m **4015**
1 m	21	Combustion air pipe **4045**
1 pcs	22	Comb. air intake shield **4051**

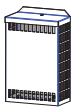
15

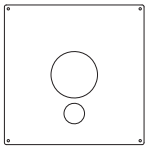
16

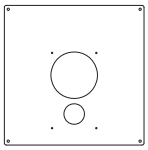
17

*Exhaust head **4004***

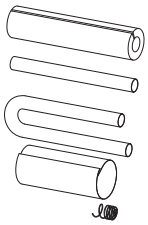
19
18
21
20
22

*Mounting kit **4880***

Instructions for wall lead-through installation

Accessories **4004** and **4880** are required for the installation.

Note that different measurements for insulation are given for Finland, as opposed to Sweden and Norway, due to different national regulations.

10. Drill or cut an opening in the wall for

    - the exhaust pipe and its insulation (ø 120 mm, Finland – ø 320 mm, Sweden and Norway). Note the different measurements for models **26CC** and **40CC**.

    - the combustion air intake pipe (ø 50 mm). The cover plate (16) can be used as a stencil.

11. Cut both pipes (18 and 21), so that the pipes extend from the wall ca. 40 - 45 mm (23 and 24) when the pipes have been pushed all the way in the heater connection pipes (25 and 26) and the heater is positioned at least 70 mm (Finland) / 100 mm (Sweden and Norway) from the wall.

12. Install the cover plates (16 ja 17) on the lead-through openings and seal the connection between the wall and the plate with silicone paste.

13. Push the pipes (18 and 21) all the way into the connection pipes (25 and 26) and seal the exhaust pipe's connection (25) with a pipe clamp (11) and the combustion air pipe's connection (26) with a hose binder (10). (Both ties can be found in the heater accessory bag.) The exhaust pipe cannot be tightened sufficiently by any other fastening than a pipe clamp (11), which must be tightened sufficiently to lock the pipe in place.

14. Place mineral wool (19) on the exhaust pipe (18) so that the insulating material extends from the back surface of the heater to ca. 10 mm outside the wall (27). Place the insulation mantel plate (20) on the insulation.

15. Then, push the heater to a distance of 70 / 100 mm from the wall, while guiding the hoses and the insulation through the lead-through openings.

16. Adjust the length of the insulation mantel plate (20), by cutting it so that its end

protrudes from the wall ca. 10 mm, and cut the edge of the sheet metal into 10–20 mm strips (28), as shown in *picture 1*. Fold the strips carefully on to the surface of the sheet metal cover.

17. Seal the clearance between the sheet metal cover (17) and the flue-gas exhaust head (15) with silicone paste and push the head into place in the wall. Attach the head to the wall with screws (30, 4 items 4,5x25). The lid of the flue-gas exhaust head (15) must be opened before installation - screw (31). Ensure that the ends of the hoses (23 and 24) extend to the limiters (32 and 33).

18. Finally, fasten the heater to the floor or the base housing (12).

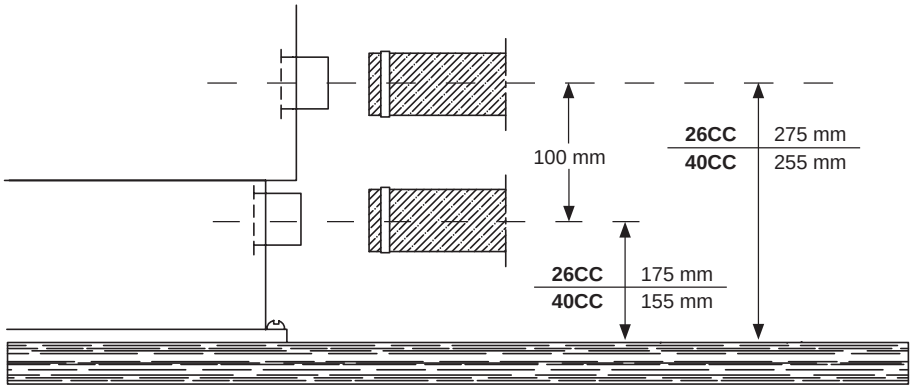

Installation measurements

Measurements in Finland

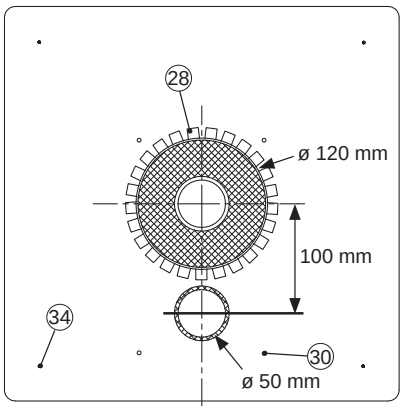

Installation measurements

Measurements in Sweden and Norway

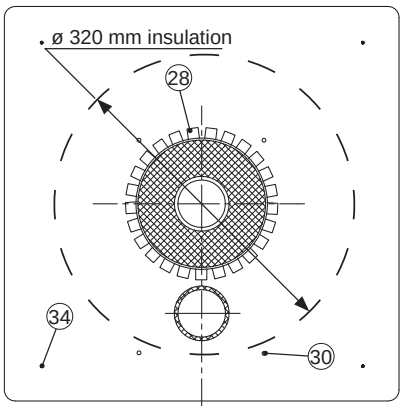

Additional insulation

Note the different measurements in Finland compared to Sweden and Norway.

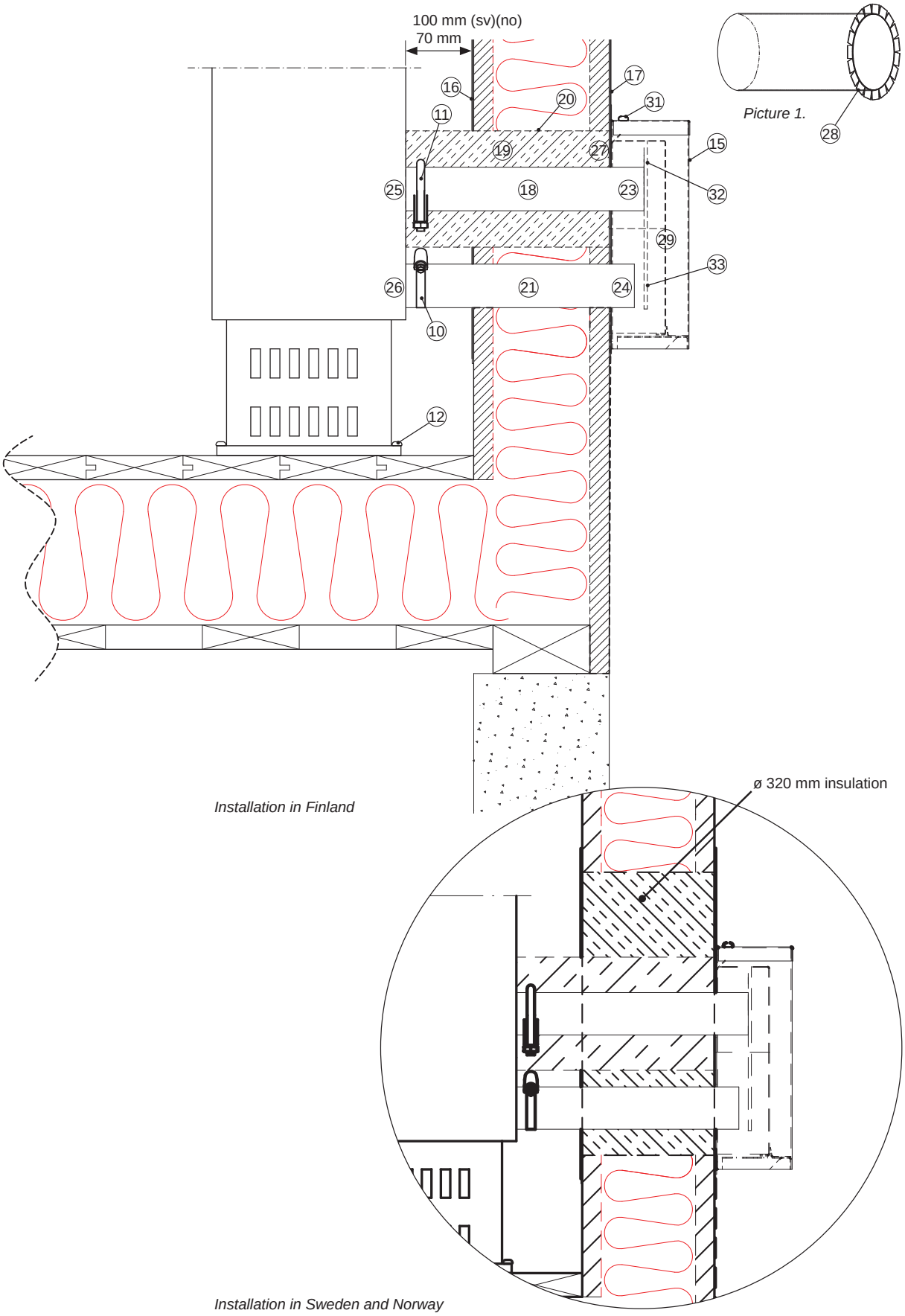

Picture 1.

Installation in Finland

Installation in Sweden and Norway

Instructions for attachment to the flue

Accessory **4880** is required for the installation.

1. Cut the flue-gas pipe, the insulation channel and the cover sheet metal to a length at which they extend to the inner surface of the flue.
2. Fasten the hoses to the heater with clamps. The flue-gas pipe must be tightened firmly with a pipe clamp.
3. Put the heater in place, and fasten it to the floor or the base housing.
4. Insulate the joint between the flue-gas hose and flue with acrylic compound.
5. The device is ready for use after you connect the power cord and the fuel hose.

Note!

If you choose to lead in the combustion air from under the floor, ensure there is sufficient ventilation in the foundations beneath the floor. Install the protective spiral on the end of the hose.

In a tall (over 5 m) flue, with a large cross-sectional surface (over 15x15 cm), the temperature of the flue-gases decrease so much that the moisture in them condenses, resulting in funnel corrosion and a weakened air flow. Due to this, a brick flue should be cased with a stainless steel pipe (diameter: 50–70 mm) and the gap between the pipe and the flue filled, for example, with LECA.

Combustion air must not be taken from the flue.

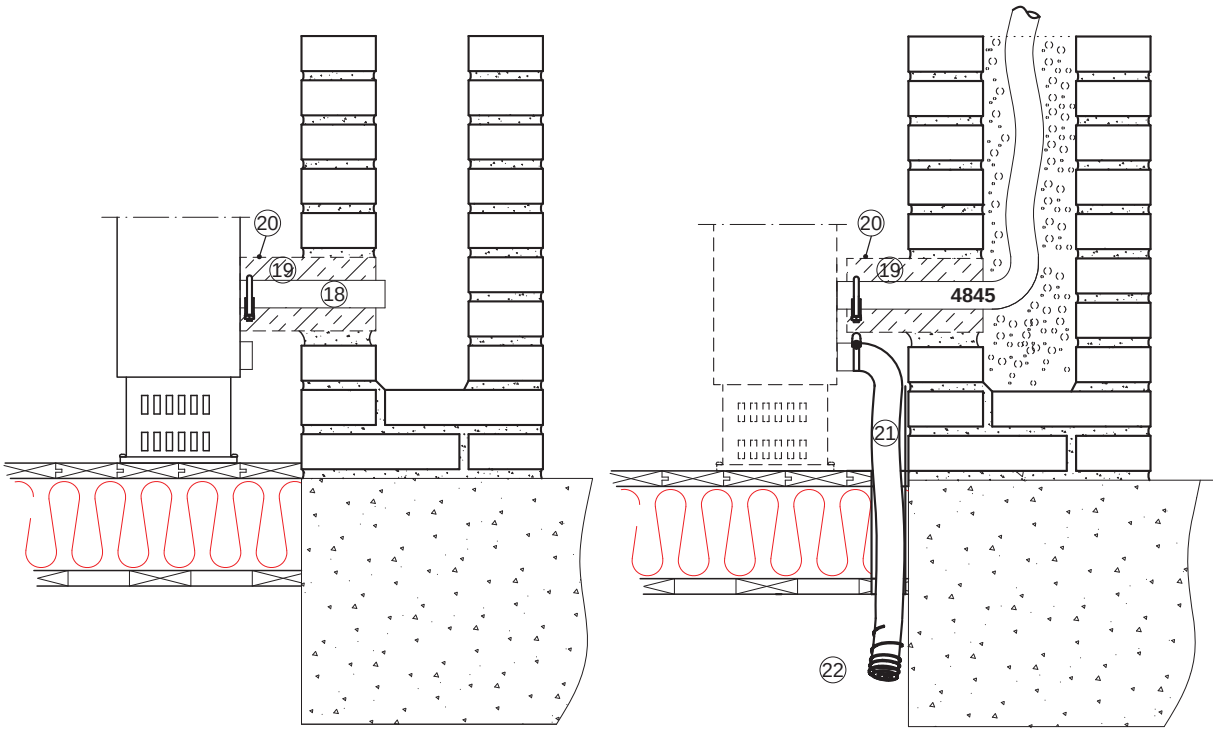

Electrical connections

Things to note about the connections

The device uses 12 V direct current voltage. To minimise current losses, make the power cable as short as possible and avoid jointing. The cross-sectional area of the cable is dependent on the length of the power cord. The cross-sectional area of the cable must be consistent all the way from the stove to the battery. The maximum length of the power cord is 10 m.

The cross-sectional area of the cable

Total length of the power cord (m)	Cross-sectional are of the cable (mm²)
0 - 4	4
4 - 6	6
6 - 10	10

If a thicker cable is required, make a separate joint in the power cord.

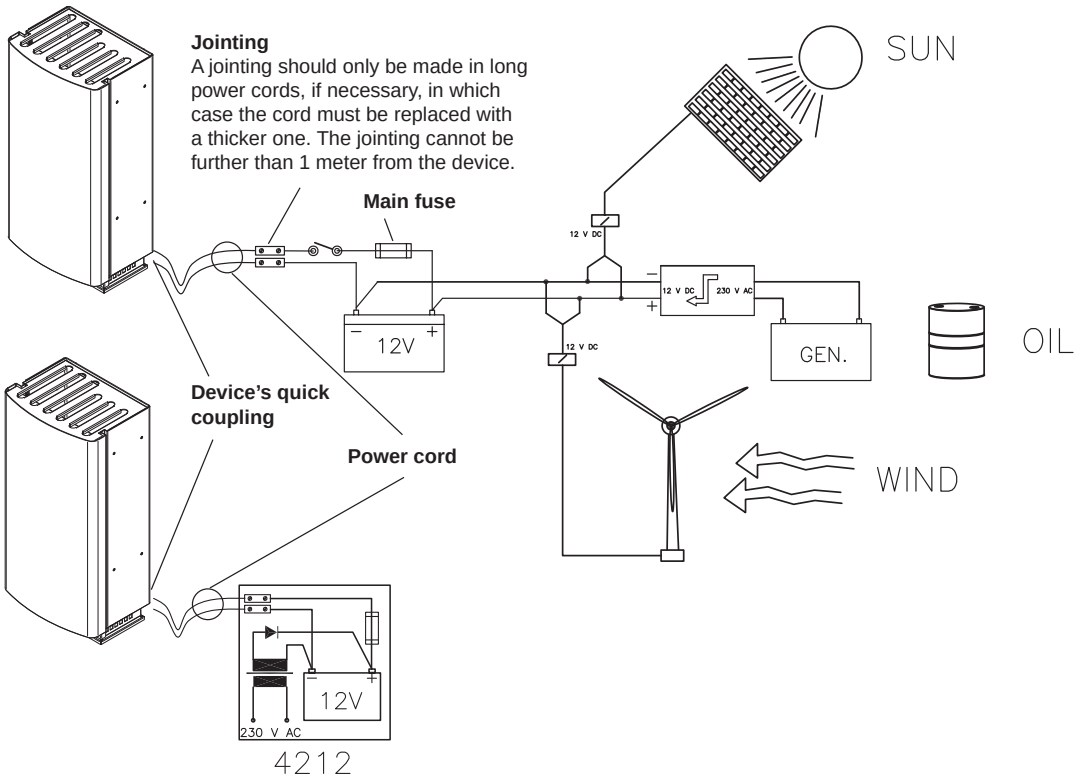

Princible diagram of the electrics.

Electrical connections of the device

12 V direct current system

Connect the red wire of the power cord to the plus terminal of the battery and the black or blue wire to the minus terminal. A 15 A main fuse must be installed near the battery on the red plus wire of the power cord.

Checking the connection

The device consumes most power when it is started up (glowing). At this point voltage losses are also at their highest. During the glowing phase, the voltage must be at least 10.7 V measured at the quick coupling. If the voltage is lower than this, the device may not start.

Fuel connections

Things to note about the connections

The standard length of the fuel hose is 4 m (max 6 m). Cut the fuel hose to a length suitable for installation.
The lift height of the pump should be less than 2 m; preferably 0.5–1 m.
The fuel pipe must always have a filter.

Country-specific requirements

The standard fuel hose is plastic. Please observe the country-specific requirements with regard to the material for the fuel hose / pipe, the fuel filter and the hose clamps. The inner diameter of a new replacement hose must be equal to the inner diameter of the plastic hose.
Copper pipe and metal filters are available as accessories.

Fuel feed

If the lift height is outside the recommended 0.5–1 m, the fuel feed must be checked and, if necessary, adjusted. The fuel feed must also always be checked, if parts of the fuel system, such as the pump or the electronics card, have been replaced.
Fuel system adjustments are device specific. We recommend that the adjustment be carried out by an authorised service shop.

Tank placement

1. The fuel tank should always be placed below the base of the device. (The fuel surface level must be below the device.) When the fuel level is above the base, the solenoid valve **30017** must be installed on the tank-side end of the hose.
2. The fuel tank can be placed in the base housing **4031**, or outside it, for example, in the foundations of the house or a suitable protective box. Protect the tank and the fuel hose from direct sunlight.
3. The fuel hose lead-through must be shielded by a metal cover pipe.
4. The standard length of the fuel hose is 4 m. It can be extended with a 2 m extension hose, which gives a total length of 6 m. Connect the hoses with bayonet couplings, which are twisted together.

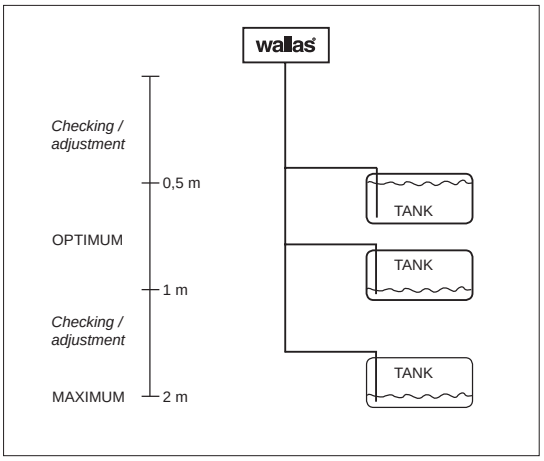

Optimal fuel tank location

If the fuel level in the tank is above the device, a solenoid valve 30017 must be installed in the fuel line immediately after the tank lead-through.

Connection to a separate tank

Cap run-throughs and sinter filters are used on plastic tanks.

Wallas fuel tanks

Volume	length x height x width	Order code	
5 l	200 x 300 x 130 mm	**2024**	Accessory
10 l	380 x 195 x 210 mm	**2027**	Accessory
30 l	590 x 200 x 300 mm	**4030**	Accessory
130 l	800 x 400 x 600 mm	**4130**	Accessory

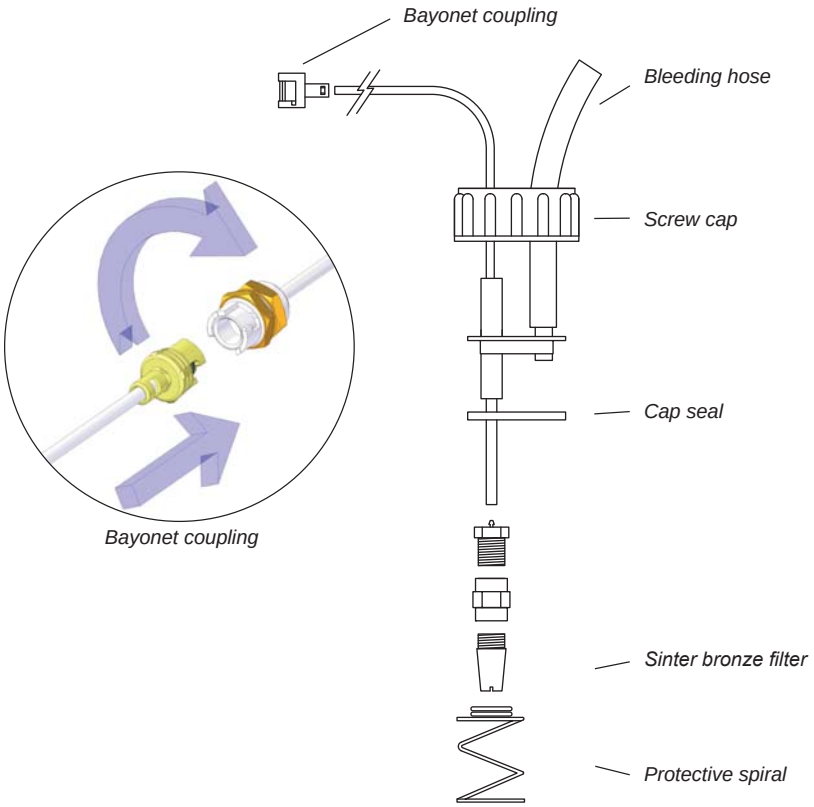

Cap run-throughs

The fuel connections must be tightened firmly so as to not allow air to leak into the hose. Always check the cleanliness of the connection surfaces before tightening.
Air will cause the device to malfunction.

Fuel

Several different types of fuel can be used in the heater.

When selecting the fuel type, take note of the temperature limits of each particular fuel. The limit values provided here are to be treated as guidelines. Confirm the actual temperature limits from the fuel supplier.

- light furnace oil / diesel, summer grade, temperature must not fall below –5 °C
- light furnace oil / diesel, winter grade, temperature must not fall below –24 °C
- light furnace oil / diesel, arctic winter grade, temperature must not fall below –40 °C
- paraffin, the operating temperature must not fall below -40 °C

If the temperature drops lower than the minimum level, paraffin may form in the fuel. This may result in the fuel filter and pump being clogged. The clog will dissolve only if the fuel temperature rises clearly over 0 °C.
In winter conditions, arctic winter grade or paraffin must be used.

The less aromatic substances the fuel contains, the less deposits will be formed. Normal furnace oils contain ca. 35–40 % aromatic substances. In coloured city diesels (e.g. Tempera 3G and 5G) and green furnace oils the concentration is 20 %. Since paraffin contains 0.5 % aromatic substances, it generates practically no scale when burning.

Confirm the actual temperature limits for the fuel you are using from the fuel supplier.

Accessories

Fuel tank socket case, 4031
The base housing enables the device to be installed directly on the fuel tank.

A 30-litre fuel tank **4030** can be installed inside the housing. The front panel of the housing contains an opening, through which the fuel level can be easily observed. The front panel can be lifted off, which makes it easier to refuel the tank.

Timer/week program, mechanical, 4206
The heater can also be started with a timer.

The weekly timer allows you to heat your holiday cottage, before your arrival, even when the cottage is outside the GSM network coverage. The weekly timer starts up and shuts down the heater at the times you select.

Timer cable, 4205
For use with weekly timer **4206**.

Solenoid valve, 30017
The solenoid valve should be installed when the surface level of the fuel is higher than the base of the device.

A valve protects against fuel spillages due to a possible pipe breakage.

Control panel cable 6 m, 363054
For installing the control panel more than 3 metres away (standard length).

Remote controller, 4430
With the extra fittings you will get more out of your Wallas heater. By switching the heater on from your GSM cell phone, you will have a warm cottage waiting for you upon arrival.

Device use

Normal use

Temperature is controlled by the thermostat (recommended use).
The device starts when the power switch (3) is pressed in continuously for at least 2 seconds, after which the yellow current indicator light (4) lights to indicate that the power is on.
The red combustion indicator light will be lit, when the burner flame has been ignited and combustion has stabilised after ca. 2.5-4 min from when the heater was turned on.
After the heater has been turned on, you can adjust the thermostat setting using the temperature control knob (2). Turn the knob to set the temperature to your desired setting.
When the thermostat indicator light (5) is lit, the temperature in the space to be heated is lower than the requested temperature and the device is increasing the power. When the indicator (5) goes out, the requested temperature has been reached.
The sun-switch shuts down the device automatically, if the temperature rises above the requested temperature, for example, due to sunlight. The temperature must rise by +3 °C above the set value for a half an hour. If the device has been shut down by the sun-switch, an indicator light (5) blinks on the thermostat. The sun-switch can be turned off temporarily, by turning the temperature control (2).
A device that has been shut down can be restarted manually, if necessary.
Conservation temperature: the temperature control (2) is set to minimum, and the room is maintained at a temperature of +2–+8 °C. The sun-switch is not enabled in this mode.

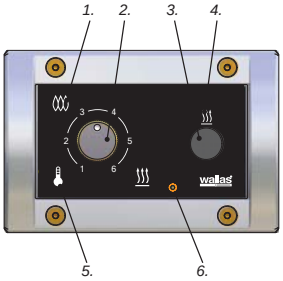

1. *Combustion indicator*
2. *Temperature adjustment / Power control*
3. *Power switch*
4. *Current indicator*
5. *Thermostat indicator*
6. *Thermostat sensor*

Alternative use

The power is adjusted manually.
To enable this function, turn the power adjuster (2) to positions min - max - min - max within 10 seconds of the yellow indicator (4) lighting up, during the device start-up.
The device signals that the function has been activated by blinking the thermostat indicator light (5) three times.
You can check whether or not the function is in use by turning the power adjuster (2): the thermostat indicator light should not light up at any point.

Signal lights

Colour	Blink interval	Function
Yellow		Power on
Red		Combustion indicator when the combustion has begun normally
Red		Aftercooling
Orange		Thermostat control
Orange	1 2 3	Manual power control engaged
Orange	10 s 10 s 10 s 10 s	Device in remote control mode
Orange	10 s 10 s 10 s 10 s	Device in remote control mode
Orange	30 s	Sun switch has shut down the device

After the heater has been started up, the power can be adjusted step-less with the power adjustment knob (2). Avoid turning the adjustment knob back and forth rapidly, as this can cause the burner to become sooty.
To end manual operation, turn the device off and restart it after allowing it to cool normally.

Shutdown

You can shut down the heater by pressing the power switch (3) in continuously for at least 2 seconds. The yellow current indicator light (4) will go out immediately. The red combustion indicator light (1) will continue to blink for ca. five minutes, while the device is cooling down. You cannot restart the device until the combustion light has stopped blinking.

Remote control

The device can be controlled manually with an accessory, which can be purchased separately.
If the device is started using the remote control, the orange indicator light (5) on the control panel will blink at 10-second intervals. The sun-switch is not enabled in this mode.

Never use the main switch to cut the power before the cooling phase, which starts after device is turned off, is completed.

First start-up

After installation or maintenance, if the fuel line is empty, the device may not start at the first attempt. If this is the case, the red combustion indicator light will start to blink roughly 4.5 minutes after start-up.

Press the power switch to the OFF position. The device cannot be restarted until the cooling phase has completed.

When it has cooled, switch the device on again.

If the device does not start after two attempts, it cannot be started again: the device will lock down (lights blink to indicate this).

Release the lock (instructions in the maintenance section)

Depending on the length of the fuel hose, the device may have to be started up several times. Keep an eye on how the fuel travels in the fuel hose while starting up the device.

Do not start the device, while the battery is being recharged from a generator unit or a battery charger (risk of overvoltage).

Cleaning and maintaining the device

To keep the device easy to use and looking good, clean it regularly. Wipe the device with a moist cloth and dry it with another cloth. Do not use abrasive cleaning sponges or agents. Also, avoid chemically strong cleaning agents.
Regularly vacuum the back of the device. Dust easily collects at the back of the device, and the airflow created by the device will spread the dust all over the room.

Observe the general maintenance recommendations for Wallas equipment when servicing the electronic and mechanical parts of the heater.

Maintenance recommendations

Basic maintenance of diesel-operated devices

Maintenance procedure	Maintenance interval	Carried out by
Inspection of basic functions (3)	After the first 100 l, or after the first season of use	Performed by the user according to the maintenance instructions
Cleaning the burner (2)	Regularly at a suitable interval (100–600 l)	Performed by the user according to the maintenance instructions
Tank and filter cleaning, and removal of water from the tank (1)	Once every operating season	Performed by the user according to the maintenance instructions

Special recommendations

- When selecting the fuel type, take note of the temperature limits of each particular fuel.
- Only diesel, light furnace oil or paraffin can be used in Wallas diesel-operated products.

Removal of water from the tank (1)

- During the period of use, add isopropyl alcohol-based (not ethyl or methyl based) anti-freeze for petrol vehicles (carburettor spirit) to the fuel. The agent should be added after the tank has been emptied, and refilled, a few times, and always at the beginning and end of an operating season. The anti-freezing agent binds the water in the fuel and prevents the fuel from settling and spoiling during the summer season. For the dosage, observe the recommendations provided by the manufacturer of the agent.

An anti-freezing agent for diesel vehicles may increase the forming of scale at the bottom of the burner and therefore shorten the maintenance interval.

Maintenance

The aromatic substances in the fuel form scale at the bottom of the burner. The rate at which the scale forms depends on the fuel quality and the power at which the heater is used. This means that the need for maintenance may vary. Maintenance entails cleaning the burner of scale and replacing the fuel needle and the base mat if necessary.

Cleaning the burner (2)

Lift the protective grille off the heater. Open the front panel of the heater, by loosening the two upper screws from both sides of the front panel.
Remove the two lowest screws on the front panel. Lift the panel slightly upwards and pull it off its mountings. *Picture 1.*

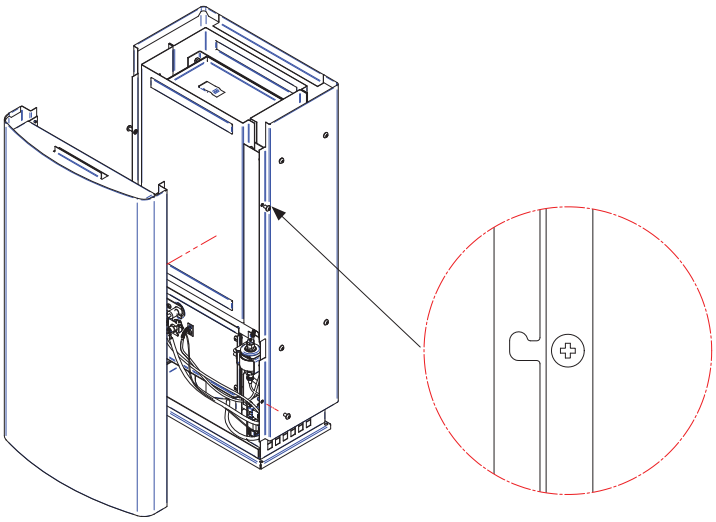

Picture 1.

Detach the temperature sensor screw and holder, as well as the corresponding glow plug holder from the cover of the burner housing. *Picture 2*. Carefully remove the glow plug and the temperature sensor, as the wiring will break if it is pulled too forcefully. Take similar caution when removing the white seal from the temperature sensor. If the seal has become porous and flaky, it must be replaced. If the glow plug is broken, replace the old plug with a new one. *Picture 3* shows examples of an undamaged glow plug and a typical short-circuited plug. The appearance of the plug rarely changes if the plug fails temporarily.
Screw open the fuel needle holder, and carefully pull the fuel needle by rotating it. Arrow in *picture 2*. The fuel needle is equipped with a locking ring, which determines the installation depth for the needle. In models **26CC** and **40CC**, the installation depth is 50 mm. If the fuel needle is clogged, replace it with a new needle by pulling the fuel hose from the upper connector on the pump and installing a new needle's hose in its place. Circle in *picture 2*. Open the fastening screws on the cover of the burner housing (4 on the **26CC**, 6 on the **40CC**). Remove the cover.
The seal on the inside of the cover must be undamaged. To detach the burner assembly, pull out the spring holding it in place. *Picture 4.*

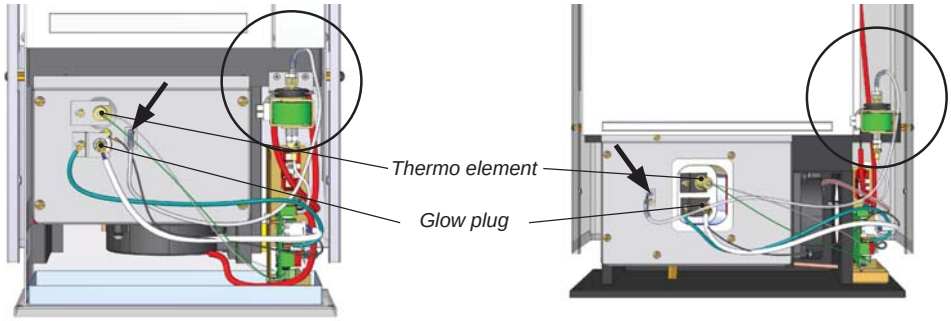

26CC 40CC

Picture 2. How to detach the thermo element, glow plug and fuel needle

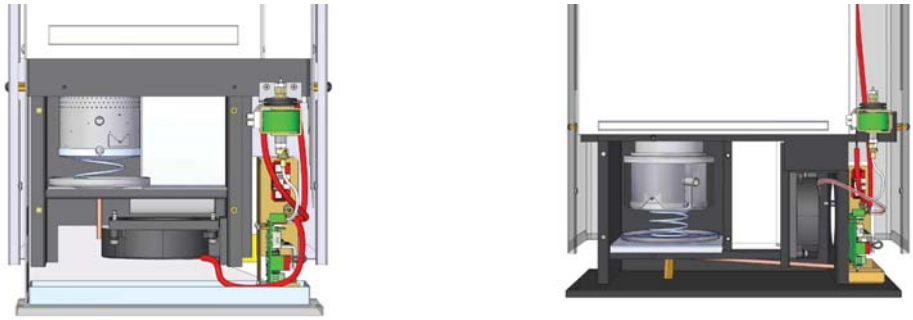

26CC 40CC

Burner chamber opened

Picture 3. Intact glow plug (above) and damaged glow plug in short circuit (below)

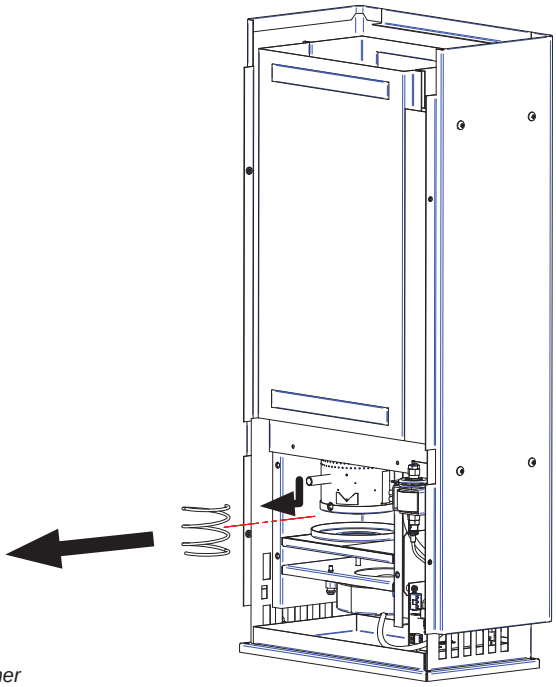

Picture 4. Detaching the burner

Picture 5 shows the different parts of the burner. Detach the thermal radiator, by pressing the locking latch toward the burner cylinder wall and tilting the thermal radiator. *Picture 5.*
Scale is formed mostly on the bottom of the burner cylinder. Gently scrape the scale off with, for example, a screwdriver. If necessary, also clean the burner cylinder walls and thermal radiator. The base mat should be replaced, at the same time as the burner is cleaned. *Picture 7.*
To assemble the burner, perform the steps listed above but in reverse order. When assembling the burner cylinder, ensure that the thermal radiator is locked into place. To make sure, turn the burner upside down and tap it. This should dislodge the thermal radiator if it is not locked in place. When installing the burner assembly, move it around to make it settle snugly in the heat exchanger. Twist the burner into place and push the retainer spring under the burner.
The fuel needle is in the correct position when the needle is angled towards the fuel pump. It is recommended that the fastening screws of the burner housing be coated with heat-resistant grease to prevent jamming.

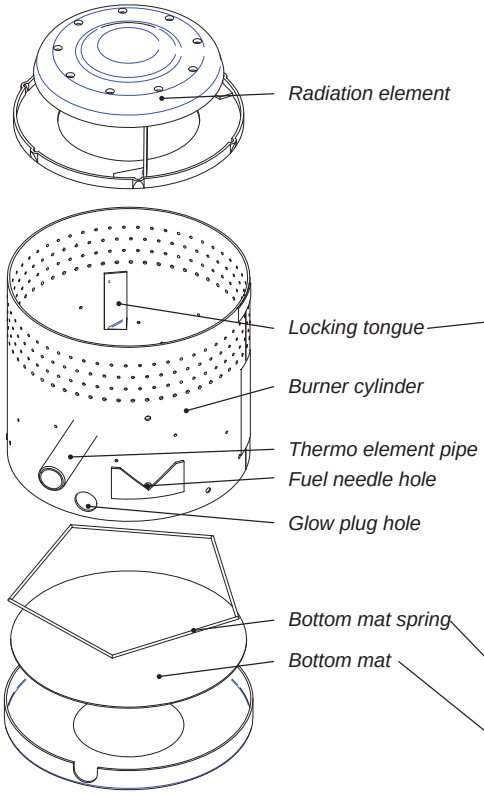

Picture 5. Burner parts

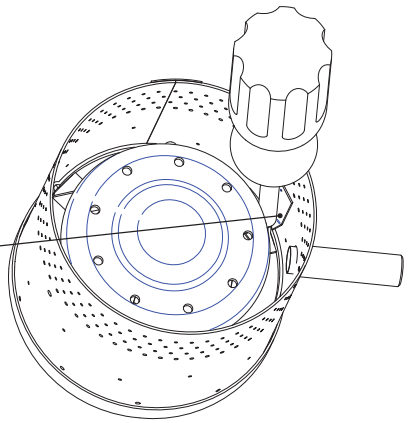
Picture 6. Detaching the radiation element

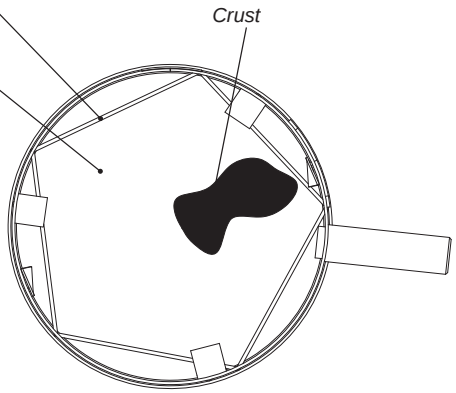

Picture 7. Burner cylinder

Inspection of basic functions (3)

After the first 100 l, or after the first season of use or after maintenance, you must always check that the heater's burner functions properly.

- Start up the heater and let it run for 15 minutes.
- Check the observation window and see if the thermal radiator is glowing red, and whether the flame is stable.
- The burner should have several separate flames with smooth sides. The flame may be either entirely blue or blue-and-yellow.
- If the flame is stable and the thermal radiator is red, the burner and the heater are working normally.
- If you cannot distinguish separate flames or the flames are entirely yellow and unstable, there are air leaks in the burner. In this case, reopen the heater and check all the burner connections for air leaks.
- If the burner flame gradually becomes unstable while the heater is in use, the burner probably needs cleaning.

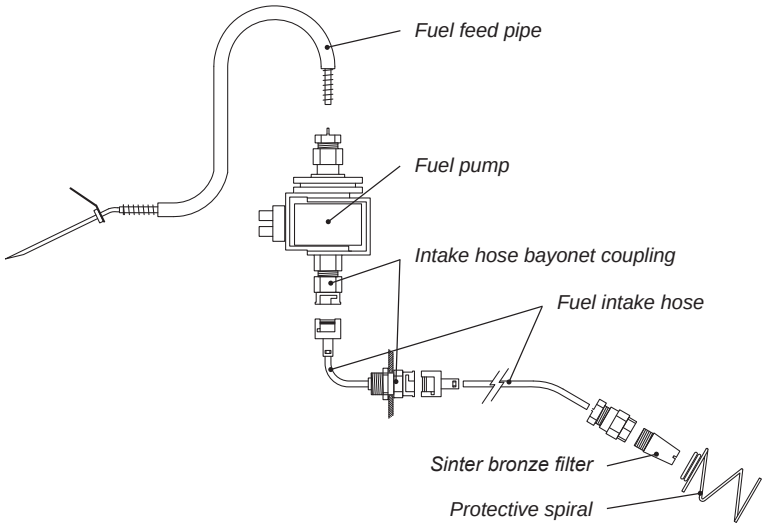

Components of the fuel system

Troubleshooting

Fault signals and releasing the lock

Colour	Blink interval	Fault description
Yellow	2 s, 2 s	Glow failure
Yellow	2 s	Combustion air blower fault
Yellow	2 s	Main blower fault
Yellow		Undervoltage
Yellow Red Green		Locking; the device locks itself after 2 unsuccessful starts *)
Red		Indicating flameout
Yellow Red		Overheat
Red	30 s	5 minutes after fault indication

If the device has locked itself, you must determine the cause for the locking before releasing it.

***) RELEASING THE LOCK:**

1. **Switch off the main power as the lights blink.**
2. **Switch the main power back on.**
3. **Press the power switch (for at least 2 s). The yellow current indicator will light for 1-3 seconds.**
4. **When the yellow current indicator light has gone out, press the power switch again (for at least 2 seconds). The device is turned off.**
5. **Restart the device normally.**

Troubleshooting tables

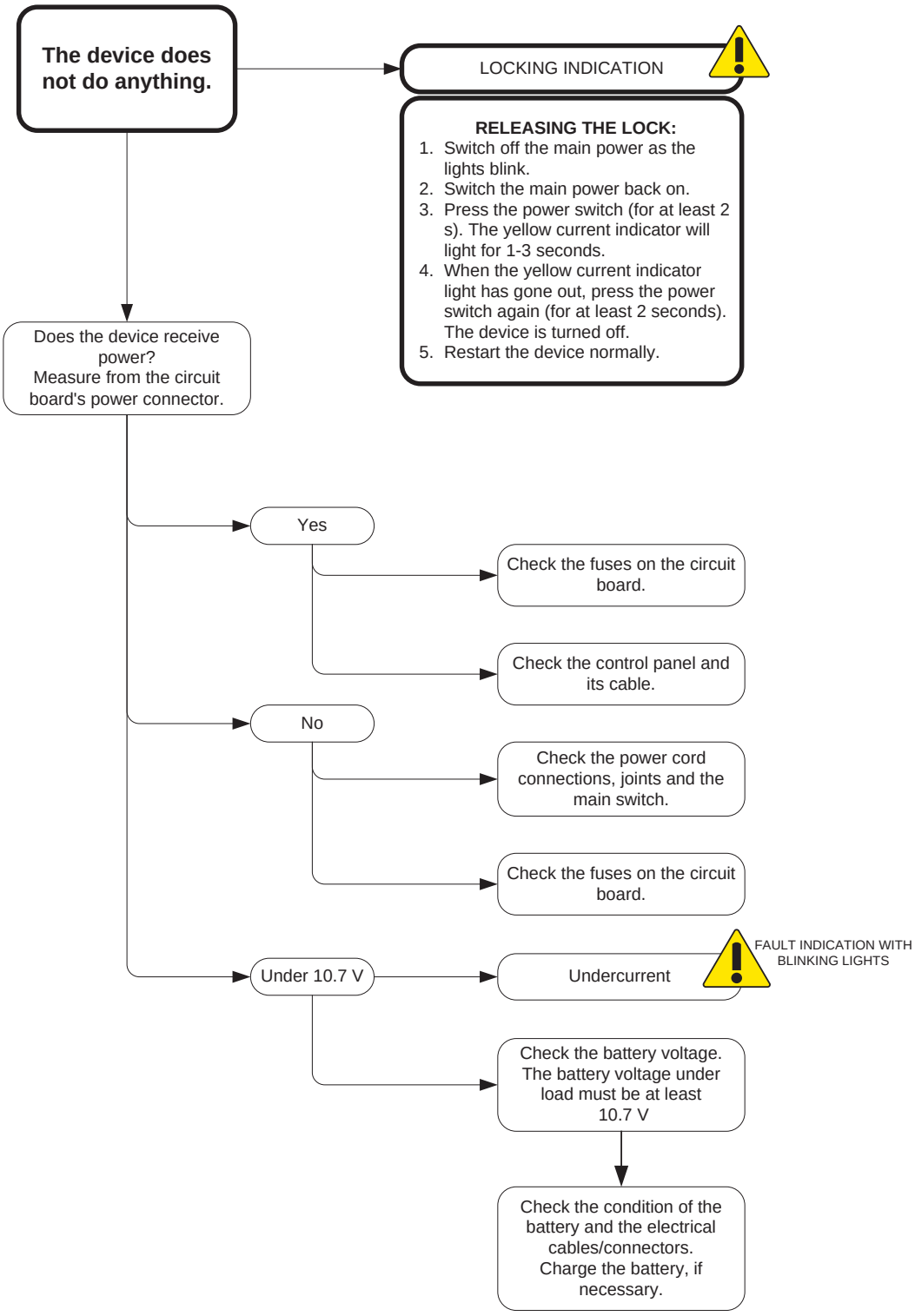

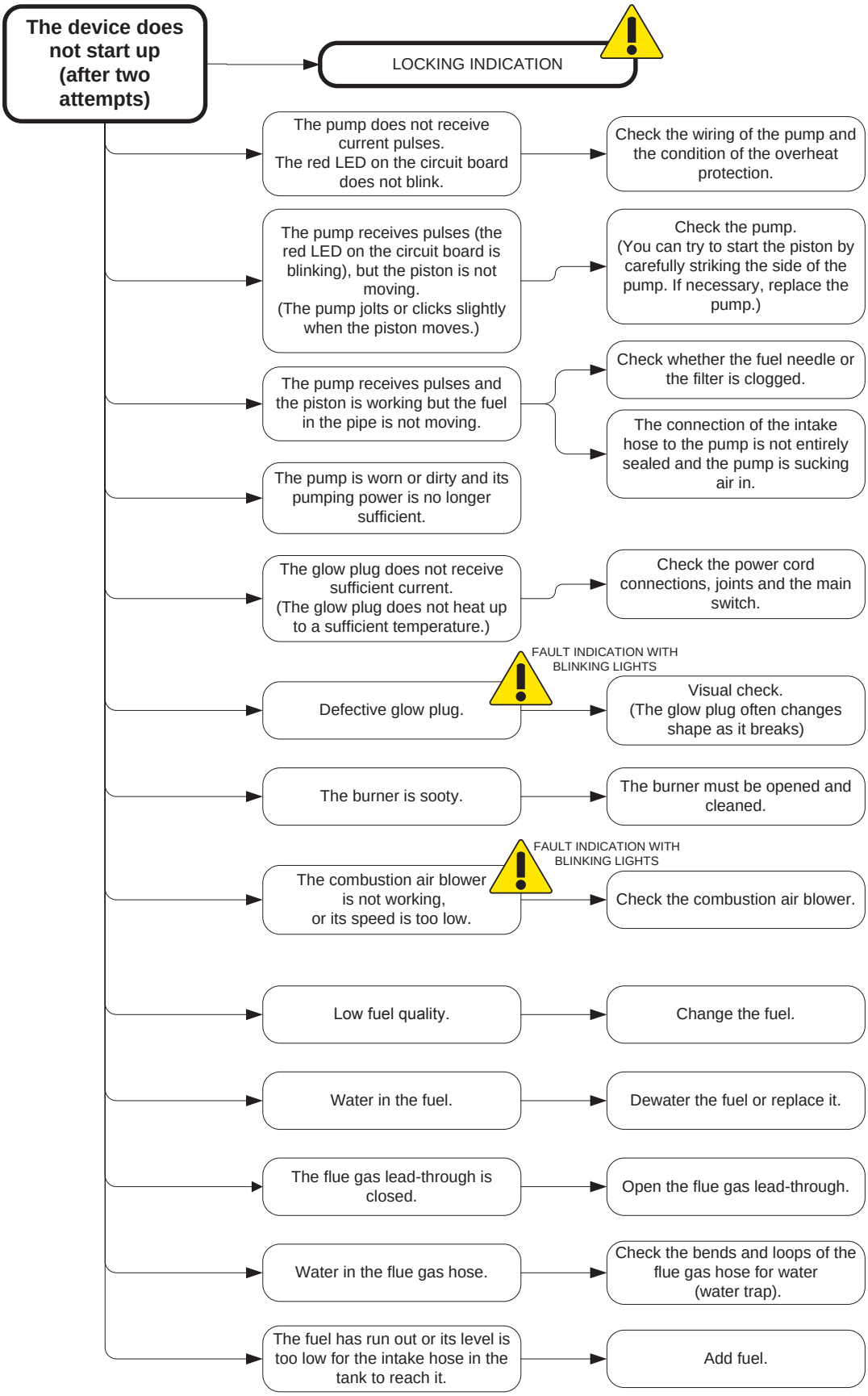
The device does not start up (after two attempts)
LOCKING INDICATION
The pump does not receive current pulses. The red LED on the circuit board does not blink.
Check the wiring of the pump and the condition of the overheat protection.
The pump receives pulses (the red LED on the circuit board is blinking), but the piston is not moving. (The pump jolts or clicks slightly when the piston moves.)
Check the pump. (You can try to start the piston by carefully striking the side of the pump. If necessary, replace the pump.)
The pump receives pulses and the piston is working but the fuel in the pipe is not moving.
Check whether the fuel needle or the filter is clogged.
The connection of the intake hose to the pump is not entirely sealed and the pump is sucking air in.
The pump is worn or dirty and its pumping power is no longer sufficient.
The glow plug does not receive sufficient current. (The glow plug does not heat up to a sufficient temperature.)
Check the power cord connections, joints and the main switch.
FAULT INDICATION WITH BLINKING LIGHTS
Defective glow plug.
Visual check. (The glow plug often changes shape as it breaks)
The burner is sooty.
The burner must be opened and cleaned.
FAULT INDICATION WITH BLINKING LIGHTS
The combustion air blower is not working, or its speed is too low.
Check the combustion air blower.
Low fuel quality.
Change the fuel.
Water in the fuel.
Dewater the fuel or replace it.
The flue gas lead-through is closed.
Open the flue gas lead-through.
Water in the flue gas hose.
Check the bends and loops of the flue gas hose for water (water trap).
The fuel has run out or its level is too low for the intake hose in the tank to reach it.
Add fuel.

2.0.2_GB

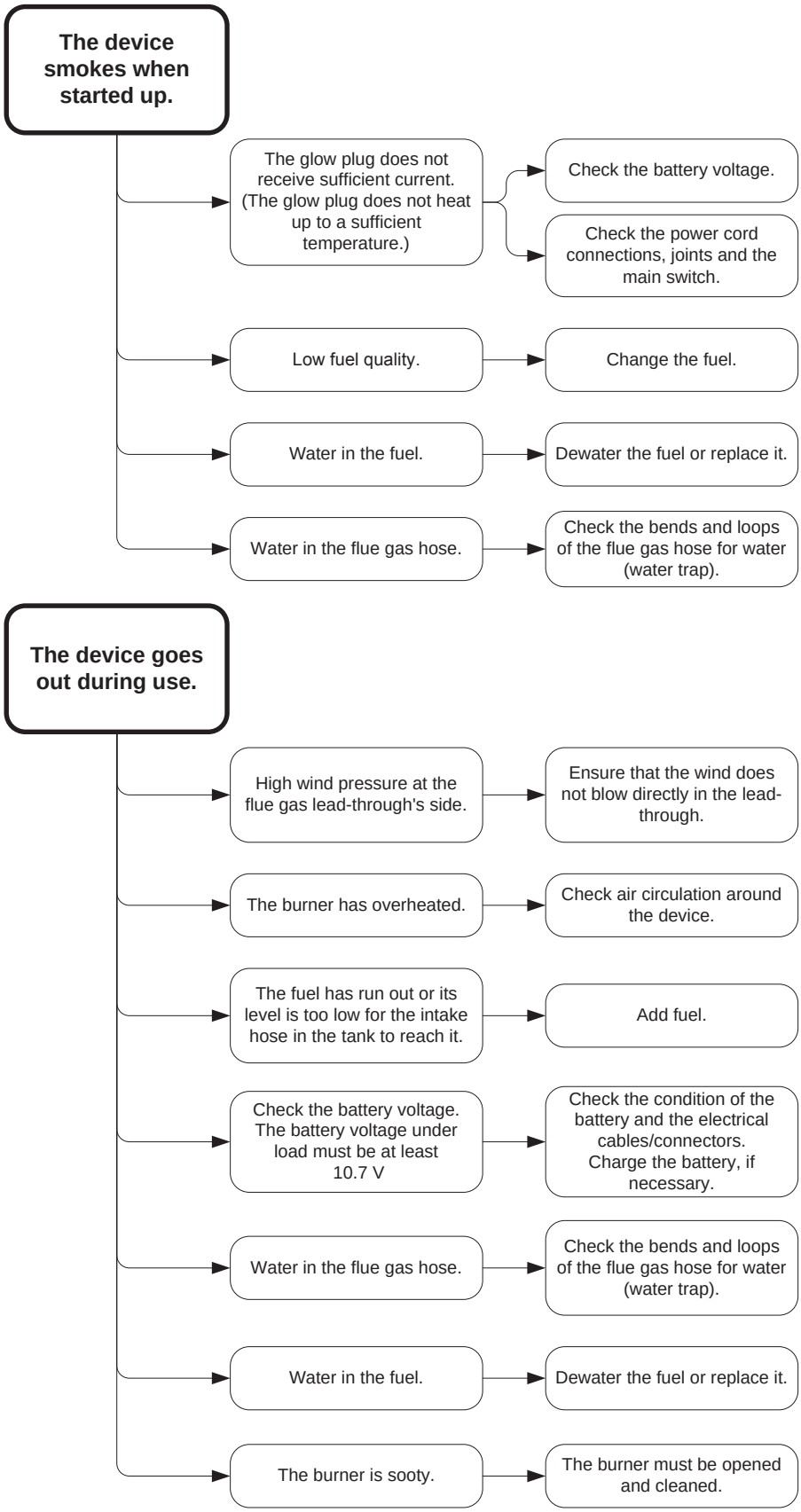
The device smokes when started up.
The glow plug does not receive sufficient current. (The glow plug does not heat up to a sufficient temperature.)
Check the battery voltage.
Check the power cord connections, joints and the main switch.
Low fuel quality.
Change the fuel.
Water in the fuel.
Dewater the fuel or replace it.
Water in the flue gas hose.
Check the bends and loops of the flue gas hose for water (water trap).
The device goes out during use.
High wind pressure at the flue gas lead-through's side.
Ensure that the wind does not blow directly in the lead-through.
The burner has overheated.
Check air circulation around the device.
The fuel has run out or its level is too low for the intake hose in the tank to reach it.
Add fuel.
Check the battery voltage. The battery voltage under load must be at least 10.7 V
Check the condition of the battery and the electrical cables/connectors. Charge the battery, if necessary.
Water in the flue gas hose.
Check the bends and loops of the flue gas hose for water (water trap).
Water in the fuel.
Dewater the fuel or replace it.
The burner is sooty.
The burner must be opened and cleaned.

2.0.3_GB

Technical connections

Circuit board connections

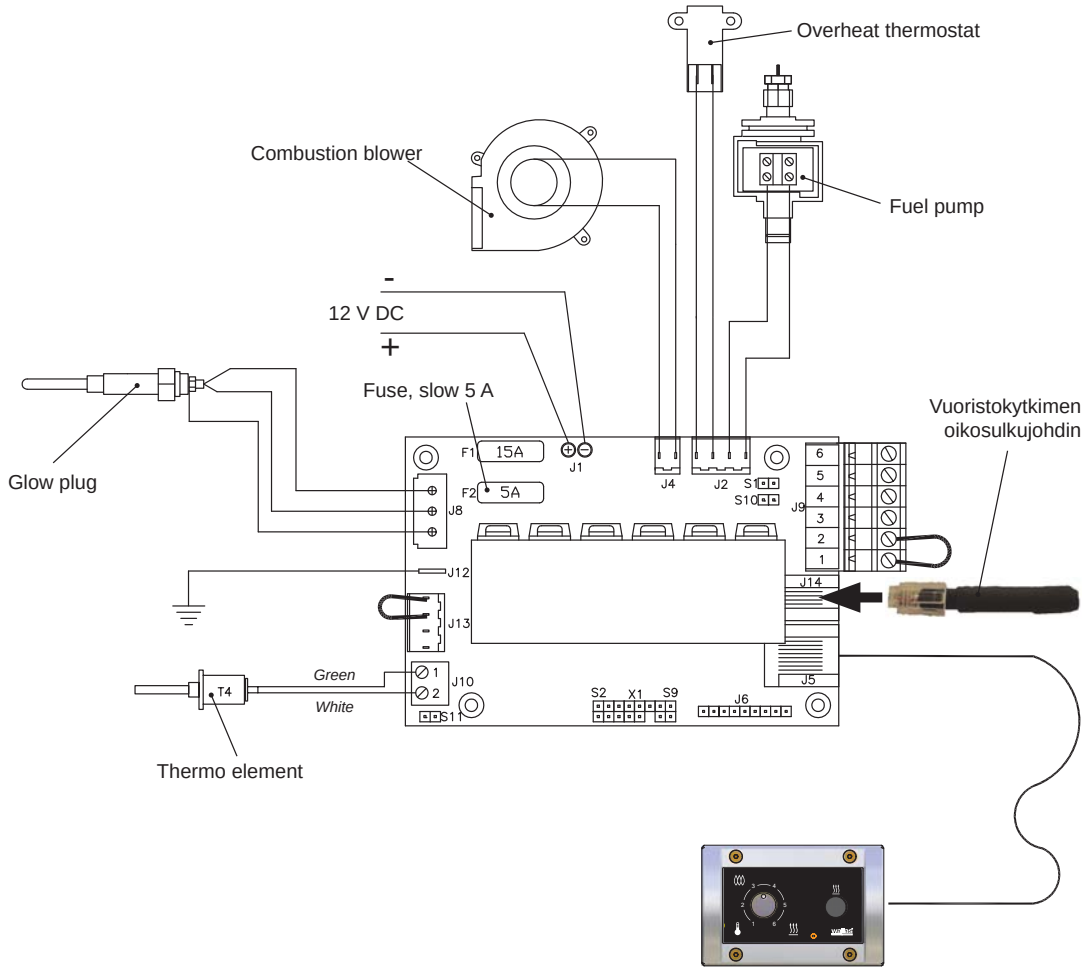

If you handle an electronics card detached from the device, take care to avoid damage due to static electricity.

Solenoid valve connection

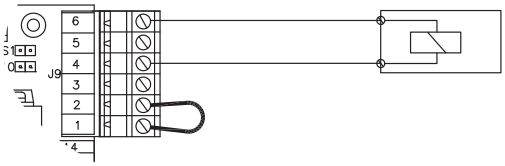

Solenoid valve connection to the circuit board

2+1

Wallas-Marin Oy (the manufacturer) shall be liable for any defects in the raw material or manufacture of the products and items sold by the importer for 2,000 operating hours or 24 months from the date of sale (whichever comes first) under the conditions noted below. Calendar term of the Warranty can be extended by an additional 12 months by registering the product in the website of Wallas-Marin Oy (www.wallas.fi) within three (3) months of the unit being sold to the end customer.

1. In the event of a defect:
   a) Look at the check list on the website or installation / usage manual (www.wallas.fi) to make sure the defect in question is not related to use. A simple problem might not be covered by the warranty ie. water in diesel or unit requires a service.
   b) Notification of the defect must be given in writing immediately, if possible, but no later than two (2) months after the appearance of the defect. After the warranty period ends, a referral back to a notification at the time of the warranty period is not valid unless the notification was made in writing. A valid receipt or another reliable official document of the time of purchase is required for proof of warranty eligibility.
   c) For repairs under warranty, the customer must take the product to the place of purchase (the seller is responsible for handling units with warranty issues), to an authorized repair shop or to Wallas-Marin Oy factory service. Warranty service must be done by authorized Wallas repair personnel. The warranty does not cover costs for the removal and reinstallation of the device or for any damage in transit of a device that has been sent for repair. Warranty does not include any transport costs. (Wallas is a return to base warranty).
   d) The customer must provide the following information in writing for warranty service:
      - description of the problem.
      - a description of where and how the device was installed (photographs of the installation may help)
      - product type and serial number, place and date of purchase

2. This warranty is not valid in the following cases when:
   - failure occurs as a result of components, which are not approved by the manufacturer, have been added to the device, and/or, it's structure has been modified without the consent of the manufacturer.
   - the instructions for installation, operation or maintenance have not been followed.
   - storage or transport has been inappropriate.
   - a problem has resulted from an accident or damage, which Wallas has had no control over (force majeure).
   - the product has suffered from improper handling, unsuitable fuel, low voltage, excess voltage, damage due to dirt, water penetrating in to the unit or corrosion
   - the device has been opened without the explicit permission of the factory/importer
   - components, other than original Wallas spare parts or components, have been used in the repair of the device.
   - repair by unauthorized service company

3. Warranty does not cover consumable or wear parts, which include: glow coil/plug, bottom mat or wick, fuel filter, seals.

4. Repairs carried out during the warranty period do not renew or alter the original warranty period.

5. Indirect damages arising from a defective product are not covered by this warranty.

6. This warranty is only valid for boat products that have been installed in boats and for cottage products that have been installed in cottages. The warranty does not cover Wallas products installed in vehicles or other areas.

7. This warranty does not limit rights specified in consumer protection legislation.

When making a warranty claim, the customer must provide proof that the maintenance and safety instructions have been thoroughly followed.
This warranty does not apply to defects which have arisen due to carelessness in following installation, operation and maintenance instructions.

26CC

		spare part no
1	GRILL	
3	HEAT RADIATION COVER 3	
5	RADIATION ELEMENT	**369007**
7	THERMOELEMENT T4	**362601**
9	FASTENING PLATE FOR GLOW PLUG	
11	COVER OF THE BURNER HOUSING	
13	WIRE SET GLOW PRIMER PLUG	**363052**
15	OVERFLOW CASING	
17	BACK COVER	
19	OVERHEAT THERMOSTAT, 120 °C	**362406**
21	HEAT INSULATION 90x110x9 mm	**364018**
23	FUEL PUMP, FC 2	**367502**
25	COVER FOR HEAT INSULATION	
27	POWER CONNECTOR, SUPPORT PLATE	**362307**
29	GASKET FOR THERMOELEMENT T4	**364015**
31	FUEL NOZZLE TUBE	**367308**
33	BOTTOM MAT Ø 85 mm	**364023**
35	POWER CONNECTOR, FEMALE	**362304**
37	CONTROL UNIT, XPS2	**361071**
39	HEAT RADIATION COVER 4	

		spare part no
2	OBSERVATION GLASS	**364013**
4	BURNER CYLINDER ASSEMBLY	**369024**
6	GASKET SET	**364021**
8	FASTENING PLATE FOR THERMOELEMENT T4	
10	GLOW PLUG	**362502**
12	GROUNDING WIRE	**363047**
14	COMBUSTION BLOWER	**365301**
16	FUEL HOSE BAJON. CONNECTOR / MALE	**367116**
18	HEAT RADIATION COVER 2	
20	HEAT RADIATION COVER 1	
22	FUEL PUMP CONNECTOR	**367101**
24	FUEL PUMP CONNECTOR BAJON.	**367102**
26	HEAT INSULATION 189x118x9 mm	**364019**
28	GASKET FOR GLOW PLUG, 1.5 mm	**364109**
30	GASKET FOR COMBUSTION BLOWER	
32	SPRING	
34	BASE	
36	FUEL HOSE BAJON. CONNECTOR CHASSIS	**367118**
38	HEAT EXCHANGER	
40	CONTROL PANEL WITH CABLE	**361061**

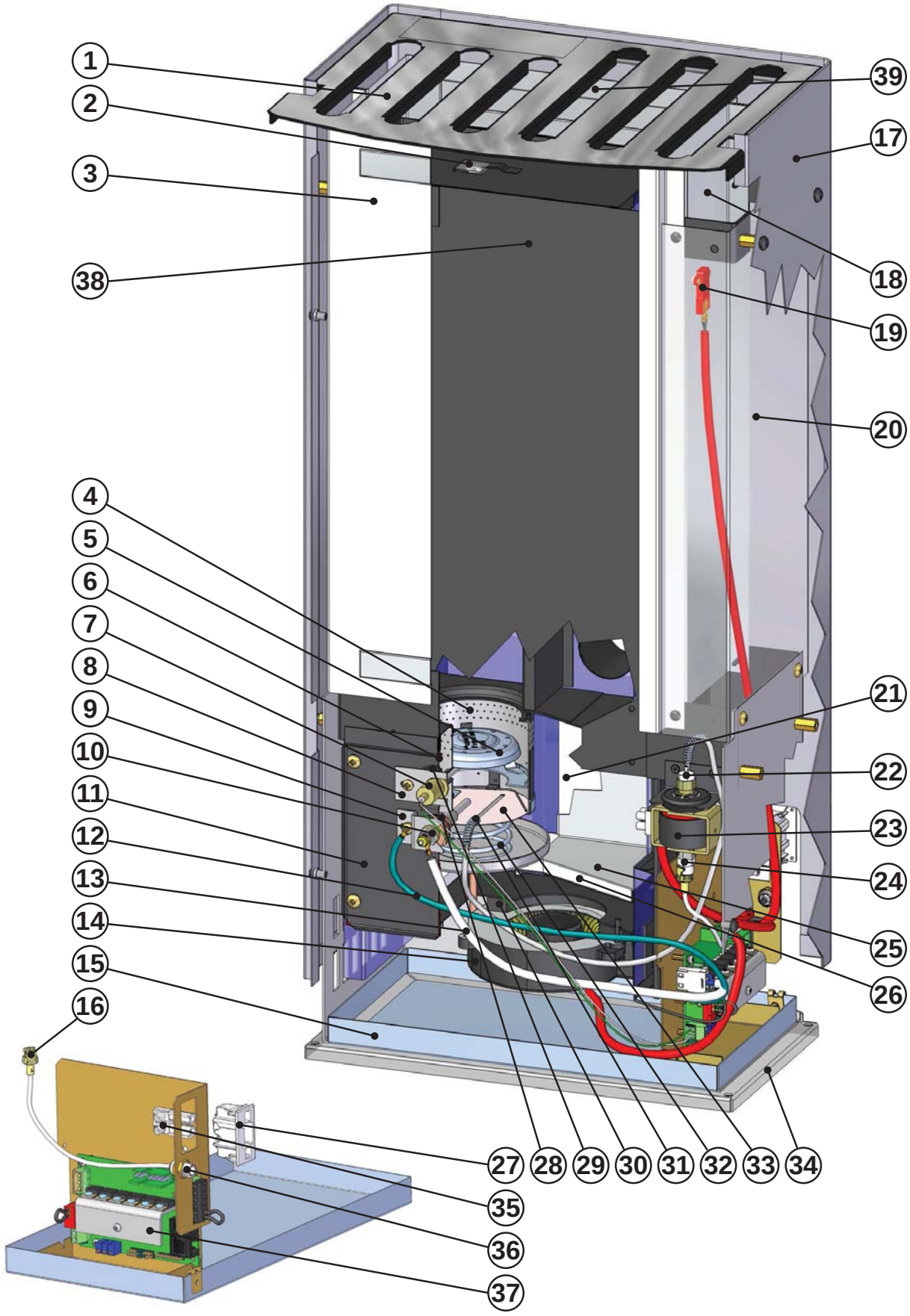
1
2
3
38
39
17
18
19
20
4
5
6
7
8
9
10
11
12
13
14
15
16
21
22
23
24
25
26
27
28
29
30
31
32
33
34
35
36
37

40CC

		spare part no
1	GRILL	
3	HEAT RADIATION COVER 3	
5	RADIATION ELEMENT	**369022**
7	THERMOELEMENT T4	**362601**
9	FASTENING PLATE FOR GLOW PLUG	
11	COVER OF THE BURNER HOUSING	
13	WIRE SET GLOW PRIMER PLUG	**363052**
15	OVERFLOW CASING	
17	BACK COVER	
19	OVERHEAT THERMOSTAT, 120°C	**362406**
21	HEAT INSULATION 80x140x9 mm	
23	FUEL PUMP, FC 2	**367502**
25	OVERFLOW CUP	
27	POWER CONNECTOR, SUPPORT PLATE	**362307**
29	GASKET FOR THERMOELEMENT T4	**364015**
31	FUEL NOZZLE TUBE	**367313**
33	BOTTOM MAT Ø 105 mm	**364024**
35	POWER CONNECTOR, FEMALE	**362304**
37	CONTROL UNIT	**361071**
39	HEAT EXCHANGER	
41	HEAT INSULATION 87x155x9 mm	
43	REFLECTOR PLATE	

		spare part no
2	OBSERVATION GLASS	**364013**
4	BURNER CYLINDER ASSEMBLY	**369027**
6	GASKET SET	**364022**
8	FASTENING PLATE FOR THERMOELEMENT T4	
10	GLOW PLUG	**362502**
12	GROUNDING WIRE	**363047**
14	COMBUSTION BLOWER	**365301**
16	FUEL HOSE BAJON. CONNECTOR / MALE	**367116**
18	HEAT RADIATION COVER 2	
20	HEAT RADIATION COVER 1	
22	FUEL PUMP CONNECTOR	**367101**
24	FUEL PUMP CONNECTOR BAJON.	**367102**
26	HEAT INSULATION 135x146x9 mm	
28	GASKET FOR GLOW PLUG, 3.0mm	**364130**
30	GASKET FOR COMBUSTION BLOWER	
32	SPRING	
34	BOTTOM PLATE	
36	FUEL HOSE BAJON. CONNECTOR CHASSIS	**367118**
38	HEAT INSULATION 152x148x9 mm, hole Ø 7 mm	
40	HEAT INSULATION 86x144x9 mm	
42	OVERFLOW PIPE	
44	CONTROL PANEL WITH CABLE	**361061**

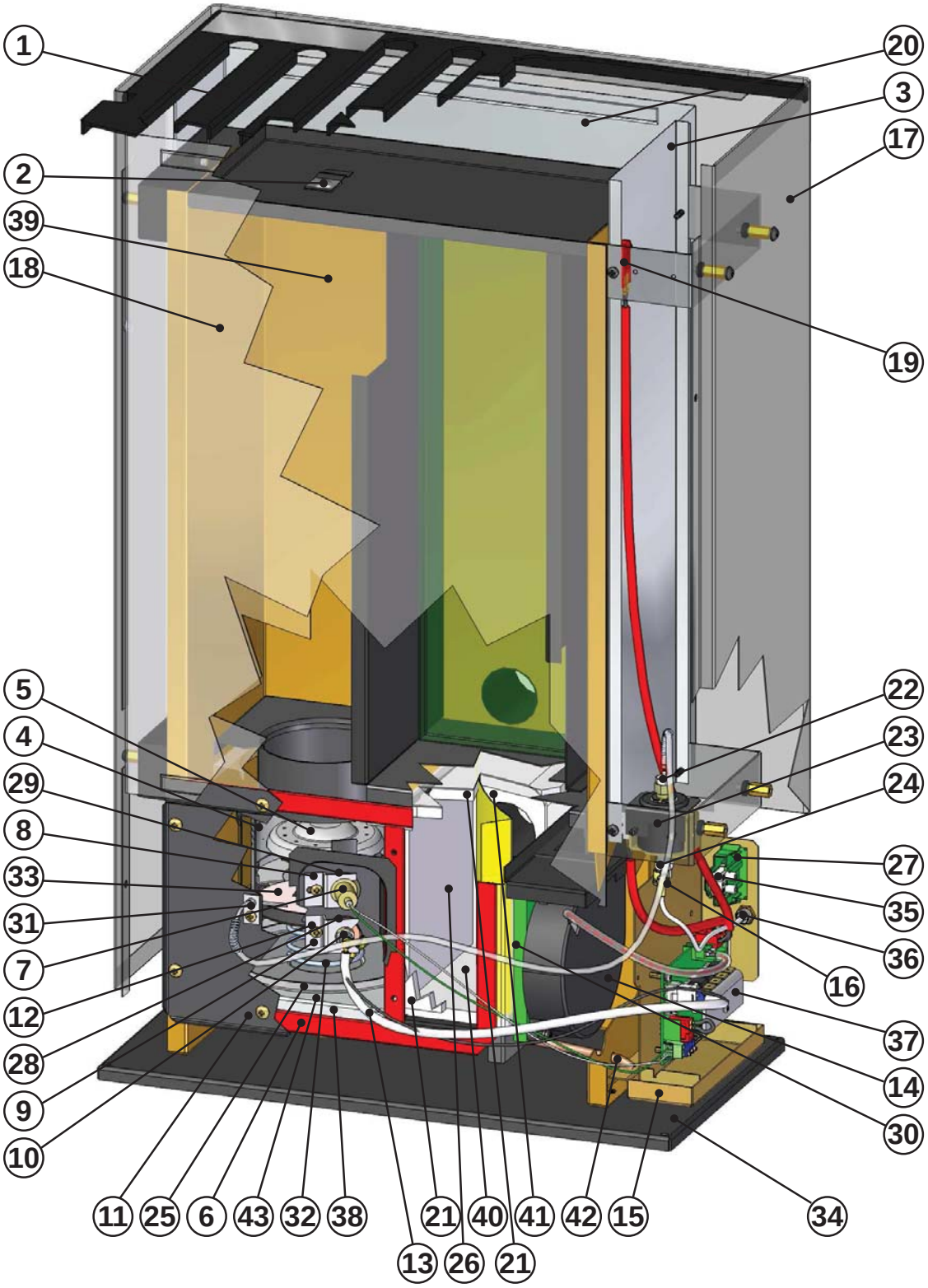
1
2
39
18
20
3
17
19
5
4
29
8
33
31
7
12
28
9
10
22
23
24
27
35
36
16
37
14
30
34
11
25
6
43
32
38
21
40
41
42
15
13
26
21